www.prepp.in

Prepp
Your Personal Exams Guide

Test Booklet Code & Serial No.
प्रश्नपत्रिका कोड व क्रमांक

C

Paper-II
ELECTRONIC SCIENCE

Signature and Name of Invigilator

1. (Signature) .....

(Name) .....

2. (Signature) .....

(Name) .....

Seat No. | | | | | | |

(In figures as in Admit Card)

Seat No. .....

(In words)

OMR Sheet No. | | | | | | |

(To be filled by the Candidate)

JUN - 38220

Time Allowed : 2 Hours] **[Maximum Marks : 200**

Number of Pages in this Booklet : **32** Number of Questions in this Booklet : **100**

Instructions for the Candidates

1. Write your Seat No. and OMR Sheet No. in the space provided on the top of this page.
2. This paper consists of **100** objective type questions. Each question will carry *two* marks. *All* questions of Paper II will be compulsory.
3. At the commencement of examination, the question booklet will be given to the student. In the first 5 minutes, you are requested to open the booklet and compulsorily examine it as follows :
   (*i*) To have access to the Question Booklet, tear off the paper seal on the edge of this cover page. Do not accept a booklet without sticker-seal or open booklet.
   (*ii*) Tally the number of pages and number of questions in the booklet with the information printed on the cover page. Faulty booklets due to missing pages/questions or questions repeated or not in serial order or any other discrepancy should not be accepted and correct booklet should be obtained from the invigilator within the period of 5 minutes. Afterwards, neither the Question Booklet will be replaced nor any extra time will be given. The same may please be noted.
   (*iii*) After this verification is over, the OMR Sheet Number should be entered on this Test Booklet.
4. Each question has four alternative responses marked (A), (B), (C) and (D). You have to darken the circle as indicated below on the correct response against each item.
   Example : where (C) is the correct response.
   (A) (B) ● (D)
5. Your responses to the items are to be indicated in the **OMR Sheet given inside the Booklet only.** If you mark at any place other than in the circle in the OMR Sheet, it will not be evaluated.
6. Read instructions given inside carefully.
7. Rough Work is to be done at the end of this booklet.
8. If you write your Name, Seat Number, Phone Number or put any mark on any part of the OMR Sheet, except for the space allotted for the relevant entries, which may disclose your identity, or use abusive language or employ any other unfair means, you will render yourself liable to disqualification.
9. You have to return original OMR Sheet to the invigilator at the end of the examination compulsorily and must not carry it with you outside the Examination Hall. You are, however, allowed to carry the Test Booklet and duplicate copy of OMR Sheet on conclusion of examination.
10. Use only Blue/Black Ball point pen.
11. Use of any calculator or log table, etc., is prohibited.
12. There is no negative marking for incorrect answers.

विद्यार्थ्यांसाठी महत्त्वाच्या सूचना

1. परिक्षार्थींनी आपला आसन क्रमांक या पृष्ठावरील वरच्या कोपऱ्यात लिहावा. तसेच आपणांस दिलेल्या उत्तरपत्रिकेचा क्रमांक त्याखाली लिहावा.
2. सदर प्रश्नपत्रिकेत 100 बहुपर्यायी प्रश्न आहेत. प्रत्येक प्रश्नास **दोन** गुण आहेत. या प्रश्नपत्रिकेतील **सर्व** प्रश्न सोडविणे अनिवार्य आहे.
3. परीक्षा सुरू झाल्यावर विद्यार्थ्याला प्रश्नपत्रिका दिली जाईल. सुरुवातीच्या 5 मिनीटांमध्ये आपण सदर प्रश्नपत्रिका उघडून खालील बाबी अवश्य तपासून पहाव्यात.
   (*i*) प्रश्नपत्रिका उघडण्यासाठी प्रश्नपत्रिकेवर लावलेले सील उघडावे. सील नसलेली किंवा सील उघडलेली प्रश्नपत्रिका स्विकारू नये.
   (*ii*) पहिल्या पृष्ठावर नमूद केल्याप्रमाणे प्रश्नपत्रिकेची एकूण पृष्ठे तसेच प्रश्नपत्रिकेतील एकूण प्रश्नांची संख्या पडताळून पहावी. पृष्ठे कमी असलेली/कमी प्रश्न असलेली/प्रश्नांचा चुकीचा क्रम असलेली किंवा इतर त्रुटी असलेली सदोष प्रश्नपत्रिका सुरुवातीच्या 5 मिनिटातच पर्यवेक्षकाला परत देऊन दुसरी प्रश्नपत्रिका मागवून घ्यावी. त्यानंतर प्रश्नपत्रिका बदलून मिळणार नाही तसेच वेळही वाढवून मिळणार नाही याची कृपया विद्यार्थ्यांनी नोंद घ्यावी.
   (*iii*) वरीलप्रमाणे सर्व पडताळून पाहिल्यानंतरच प्रश्नपत्रिकेवर ओ.एम.आर. उत्तरपत्रिकेचा नंबर लिहावा.
4. प्रत्येक प्रश्नासाठी (A), (B), (C) आणि (D) अशी चार विकल्प उत्तरे दिली आहेत. त्यातील योग्य उत्तराचा रकाना खाली दर्शविल्याप्रमाणे ठळकपणे काळा/निळा करावा.
   उदा. : जर (C) हे योग्य उत्तर असेल तर.
   (A) (B) ● (D)
5. या प्रश्नपत्रिकेतील प्रश्नांची उत्तरे **ओ.एम.आर. उत्तरपत्रिकेतच दर्शवावीत.** इतर ठिकाणी लिहिलेली उत्तरे तपासली जाणार नाहीत.
6. आत दिलेल्या सूचना काळजीपूर्वक वाचाव्यात.
7. प्रश्नपत्रिकेच्या शेवटी जोडलेल्या कोऱ्या पानावरच कच्चे काम करावे.
8. जर आपण ओ.एम.आर. वर नमूद केलेल्या ठिकाणा व्यतिरीक्त इतर कोठेही नाव, आसन क्रमांक, फोन नंबर किंवा ओळख पटेल अशी कोणतीही खूण केलेली आढळून आल्यास अथवा असभ्य भाषेचा वापर किंवा इतर गैरमार्गांचा अवलंब केल्यास विद्यार्थ्याला परीक्षेस अपात्र ठरविण्यात येईल.
9. परीक्षा संपल्यानंतर विद्यार्थ्याने मूळ ओ.एम.आर. उत्तरपत्रिका पर्यवेक्षकांकडे परत करणे आवश्यक आहे. तथापि, प्रश्नपत्रिका व ओ.एम.आर. उत्तरपत्रिकेची द्वितीय प्रत आपल्याबरोबर नेण्यास विद्यार्थ्यांना परवानगी आहे.
10. फक्त निळ्या किंवा काळ्या बॉल पेनचाच वापर करावा.
11. कॅलक्युलेटर किंवा लॉग टेबल वापरण्यास परवानगी नाही.
12. चुकीच्या उत्तरासाठी गुण कपात केली जाणार नाही.

www.prepp.in

Prepp
Your Personal Exams Guide

Prepp
Your Personal Exam Guide

www.prepp.in

Prepp
Your Personal Exams Guide

Electronic Science
Paper II

Time Allowed : 120 Minutes] **[Maximum Marks : 200**

Note : This Paper contains **Hundred (100)** multiple choice questions. Each question carrying **Two (2)** marks. Attempt *All* questions.

---

1. The maximum and the minimum size of a segment in 8086 is :

   (A) 64 K, 16 bytes (B) 32 K, 256 bytes

   (C) 16 K, 16 bytes (D) 64 K, 256 bytes

2. 8051 has 8 bit data bus, but it can generate 16 bit addresses using :

   (A) $IO/\overline{M}$ (B) ALE

   (C) $R/\overline{W}$ (D) $\overline{EA}$

3. Which of the following represents indexed addressing ?

   (A) MOVC A, @ + DPTR (B) AJMP addr.

   (C) SET B 07H (D) MOV A, 47H

4. The alternate function of 8051 port 2 is :

   (A) Input/output data (D_0 – D_7)

   (B) Sending higher order address (A_8 – A_{15})

   (C) Sending lower order address (A_0 – A_7)

   (D) Serial input/output

5. Bus arbitration, Bus Request and Bus Grant are terms used in :

   (A) Serial communication (B) Memory map design

   (C) Direct memory access (D) Address/Data Multiplexing

---

www.prepp.in

Prepp
Your Personal Exams Guide

6. The timer 0 of 8051 with 1 MHz clock can generate maximum delay of ..... with resolution ..... .

(A) 64 ms, 1 µs
(B) 64 µs, 1 ms
(C) 32 µs, 100 ms
(D) 256 ms, 1 µs

7. When two BCD numbers are added, the answer is a non-BCD number. To convert it in BCD form the instruction used is :

(A) SUBB A, # data
(B) XCH A, Rn
(C) ADD A, Rn
(D) DA A

8. Arrange the sequence of 8086 interrupts as per the priority assigned, from lowest to highest :

(1) Single step

(2) INTR

(3) NMI

(4) Divide error, Int n , INTO

(A) (2) (3) (4) (1)

(B) (1) (2) (3) (4)

(C) (3) (2) (1) (4)

(D) (1) (3) (2) (4)

www.prepp.in

Prepp
Your Personal Exams Guide

9. Match List I with List II :

List I (Instruction)	**List II (Addressing Mode)**
(*a*) DJNZ, R3, 100p	(1) Implied
(*b*) ADD R4	(2) Direct
(*c*) LCALL 2020	(3) Register
(*d*) SWAP	(4) Relative

Codes :

	(*a*)	(*b*)	(*c*)	(*d*)
(A)	(4)	(2)	(3)	(1)
(B)	(4)	(3)	(2)	(1)
(C)	(4)	(1)	(2)	(3)
(D)	(3)	(4)	(1)	(2)

10. **Assertion (A) :**

High data rate can be handled by reducing the interrupt overheads.

Reason (R) :

DMA is fast data transfer process.

(A) Both (A) and (R) are true and (R) is correct explanation of (A)

(B) Both (A) and (R) are true but (R) is not correct explanation of (A)

(C) (A) is true but (R) is false

(D) (A) is false but (R) is true

www.prepp.in

11. ..... cannot be fabricated on an IC.

(A) Transistors
(B) Diodes
(C) Resistors
(D) Large inductors and transformers

12.

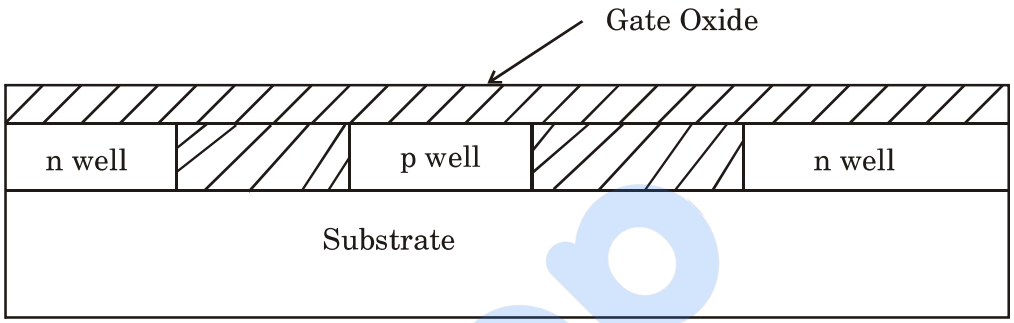

Gate oxide layer consists of :

(A) SiO_2 layer, overlaid with a few layers of an oxynitrided oxide
(B) Only SiO_2 layer
(C) SiO_2 layer with polysilicon layer
(D) SiO_2 layer and stack of epitaxial layer of polysilicon

13. X-ray diffraction patterns are used for studying crystal structure of solids because :

(A) X-rays have high energy and hence they can penetrate through solids
(B) X-rays are electromagnetic radiation, therefore they do not interact with matter
(C) X-ray wavelengths are comparable to inter-atomic distance
(D) High frequency of X-rays allows quick analysis

www.prepp.in

Prepp
Your Personal Exams Guide

14. In the CMOS stick diagrams the *n* and *p* transistors are separated by :

(A) Thick black line
(B) Dotted blue line
(C) Thick yellow line
(D) Dotted brown line

15. For CMOS circuits which of the following is *true* ?

(A) There is low power consumption during high speed switching
(B) There is high power consumption in static condition
(C) There is negligible power consumption during dynamic condition
(D) The dynamic power consumption increases with increasing frequency of operation

16. Which equation is *correct* for a digital gate with symbols carrying usual meaning ?

(A) $V_{NL} = V_{1L(Max)} + V_{0L(Max)}$
(B) $V_{NH} = V_{0H(Min)} + V_{1H(Min)}$
(C) $V_{NL} = V_{0H(Min)} - V_{1H(Min)}$
(D) $V_{NH} = V_{0H(Min)} - V_{1H(Min)}$

17. **Assertion (A) :**

Shallow Trench Isolation (STI) prevents electrical current leakage between adjacent semiconductor devices.

Reason (R) :

STI process involves etching a pattern of trenches in silicon and filling them with insulating SiO_2.

(A) Both (A) and (R) are true and (R) is the correct explanation of (A)
(B) Both (A) and (R) are true but (R) is not the correct explanation of (A)
(C) (A) is true but (R) is false
(D) (A) and (R) both are false

www.prepp.in

Prepp
Your Personal Exams Guide

18. Match List I with List II :

List I	**List II**
(*a*) ion implantation	(1) interconnect between devices
(*b*) etching	(2) insulating dielectric layer
(*c*) oxidation	(3) removal of unwanted material
(*d*) metallization	(4) low temperature impurity insertion

Codes :

	(*a*)	(*b*)	(*c*)	(*d*)
(A)	(1)	(2)	(3)	(4)
(B)	(4)	(3)	(2)	(1)
(C)	(4)	(2)	(1)	(3)
(D)	(2)	(3)	(4)	(1)

19. 'Register Transfer Level' means :

(A) A structure that deals with only behavioural constructs

(B) A structure that combines both behavioural and data flow constructs and can be acceptable by logic synthesis tools

(C) A structure that deals with only data flow constructs

(D) A structure that defines transfer of register from one region to the other

www.prepp.in

Prepp
Your Personal Exams Guide

20. IIR filters are :

(A) Recursive where present output depends on present and past inputs and output samples only

(B) Non-recursive where present output depends on present and past input samples only

(C) Recursive where present output depends on present and past input samples only

(D) Non-recursive where present output depends on present and past inputs and output samples only

21. ECG is recorded with the help of :

(A) Non-contact probes
(B) Surface metal electrodes
(C) Penetrating metal electrodes
(D) Optical electrodes

22. The stub length on single stub matching cancels :

(A) Susceptance
(B) Permeability
(C) Conductance
(D) Inductance

23. The principle mode of propagation in co-axial line is ..... mode.

(A) TE
(B) TM
(C) TEM
(D) TE_{11}

24. The distance around one cycle of Smith chart is :

(A) λ
(B) $\lambda/4$
(C) $\lambda/2$
(D) $\lambda/8$

www.prepp.in

Prepp
Your Personal Exams Guide

25. The value of directivity of isotropic antenna is :

(A) 1 (B) 0

(C) ∞ (D) 0.5

26. A transmission line has a VSWR of 2, the reflection coefficient is equal to :

(A) 1/3 (B) 0

(C) 1/4 (D) 1/2

27. In a microwave system, wave guides has the advantage of :

(A) Positive phase shift

(B) High power handing capability and low loss

(C) Thin dielectric substrate

(D) Coupling with co-axial wave guides

28. Arrange the following S-parameters of E-plane in increasing order of value :

(*a*) S12 (*b*) S13

(*c*) S23 (*d*) S33

(A) (*d*), (*c*), (*a*), (*b*)

(B) (*d*), (*a*), (*b*), (*c*)

(C) (*a*), (*d*), (*c*), (*b*)

(D) (*c*), (*d*), (*a*), (*b*)

www.prepp.in

Prepp
Your Personal Exams Guide

29. Match the following List I and List II :

List I

(*a*) Directivity (D)

(*b*) Antenna Efficiency (*n*)

(*c*) Fraunhofer Region (R)

(*d*) The effective area of an antenna (Ae)

List II

(1) $\frac{\lambda^2 G}{4\pi}$

(2) $\geqq 2D^2 / \lambda$

(3) $\frac{\text{Radiated Power}}{\text{Total Input Power}}$

(4) $\frac{\text{Max Radiation Intensity of Single Antenna}}{\text{Radiation Intensity of an Isotropic Antenna}}$

Codes :

	(*a*)	(*b*)	(*c*)	(*d*)
(A)	(2)	(3)	(4)	(1)
(B)	(1)	(2)	(4)	(3)
(C)	(4)	(3)	(2)	(1)
(D)	(2)	(3)	(1)	(4)

30. Delay line cancellor in RADAR :

(A) Improves SNR

(B) Rejects stationary clutter at zero frequency

(C) Corresponds to amplifier echo

(D) Is frequency domain filter

www.prepp.in

Prepp
Your Personal Exams Guide

31. Protocol used to link devices in IOT is :

(A) TCP/IP
(B) I^2C
(C) SPI
(D) UDP

32. Cyclic redundancy check and hamming code works on data of ..... and ..... respectively.

(A) 8-bit size, any size
(B) fixed size, any size
(C) any size, fixed size
(D) 2-bit size, any size

33. In source coding theorem if, discrete memoryless source of entropy H(S) and average code-word length $\bar{L}$, the source coding theorem has ..... following relation.

(A) $\bar{L} \leq H(S)$
(B) $\bar{L} \geq H(S)$
(C) $\bar{L} \geq \log H(S)$
(D) $\bar{L} \leq \log H(S)$

34. Cloud computing corresponds to :

(A) Analysis of metrological data
(B) Agglomeration of computing and storage resources
(C) Localised high performance computing
(D) Mobile data management

35. In the vestigial sideband amplitude modulation (AM-VSB), the transmitted signal has a bandwidth of ....., where B is bandwidth of original analog signal.

(A) $B - \Delta$
(B) $B + \Delta$
(C) $B \pm \Delta$
(D) $B \pm 2\Delta$

www.prepp.in

Prepp
Your Personal Exams Guide

36. Differential pulse coded modulation exploits the ..... between samples to ..... encoding rate.

(A) autocorrelation, decrease
(B) correlation, increase
(C) autocorrelation, increase
(D) correlation, decrease

37. The size of IPv6 address is :

(A) 32 bit
(B) 64 bit
(C) 128 bit
(D) 256 bit

38. Match List I with List II and select the *correct* answer using codes given below :

List I	**List II**
(*a*) Error signal	(1) Modulated signal
(*b*) Control signal	(2) Phase detector
(*c*) Output signal	(3) Loop filter
(*d*) Input signal	(4) Voltage controlled oscillator

Codes :

	(*a*)	(*b*)	(*c*)	(*d*)
(A)	(2)	(4)	(3)	(1)
(B)	(4)	(3)	(1)	(2)
(C)	(2)	(3)	(4)	(1)
(D)	(4)	(1)	(3)	(2)

www.prepp.in

Prepp
Your Personal Exams Guide

39. The main difference between Amplitude modulation and Frequency modulation is that :

(*a*) Carrier frequency is higher than base band frequency

(*b*) Frequency modulation has limited bandwidth

(*c*) Frequency modulation has unlimited bandwidth

(*d*) Intermediate frequency stage is found in frequency demodulator circuit

(A) (*a*) and (*c*)

(B) (*c*) and (*d*)

(C) (*b*) and (*d*)

(D) (*c*) only

40. A spectrum analyser is an instrument used for :

(A) Visualising time variation of a waveform

(B) Identifying dominant frequencies and harmonics

(C) Introducing noise floor

(D) Determination of impedance of an element

41. When checking a good SCR with an ohmmeter it will :

(A) Show low resistance with positive on anode and negative on cathode and high resistance when reversed

(B) Show low resistance in both directions

(C) Show high resistance in both directions

(D) Show high resistance with positive on anode and negative on cathode, and low resistance when reversed

42. UJT is often used in power controlling circuits because of :

(A) Excellent triggering properties

(B) High power dissipation

(C) Large breakdown voltage

(D) Capable of supplying high current for triggering

www.prepp.in

Prepp
Your Personal Exams Guide

43. Weight of SMPS based 12 volts adopters much lower as compared to conventional adopter because SMPS uses :

(A) Ferrite transformers
(B) Power MOSFETS
(C) Rectifiers in the first stage
(D) High frequency step-down

44. The advantage of on-line UPS over off-line UPS is that :

(A) Give true sine wave
(B) There is no phase change of output during mains failure
(C) They can provide high power and long duration
(D) Efficiency of conversion is very high

45. Match the following for on-state resistance for the device in milliohms :

Set I	**Set II**
(*a*) Diode	(1) 0.25
(*b*) BJT	(2) 0.16
(*c*) SCR	(3) 3.5
(*d*) Triac	(4) 4.0

Codes :

	(*a*)	(*b*)	(*c*)	(*d*)
(A)	(2)	(4)	(1)	(3)
(B)	(3)	(4)	(1)	(2)
(C)	(4)	(2)	(3)	(1)
(D)	(1)	(2)	(4)	(3)

www.prepp.in

Directions 46 to 49 :

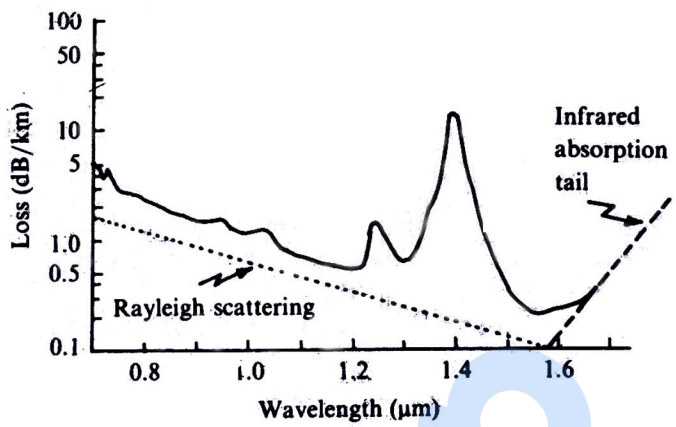

The shifting of the operating wavelength to the 1.3 μm range has another important advantage. The corresponding loss is much smaller. Fig. above shows the loss spectrum for a typical optical fibre and as can be seen the losses at λ_0 ~ 1.3 μm are ~ 1 dB/km which is smaller by a factor of about 3 when compared with losses at λ_0 ~ 0.8 μm. Optical communication systems around 1981 used graded index multimode fibres with 1.3 μm sources; typical sources used were InGaAsP/InP LEDs ($\Delta\lambda_0 \approx$ 25 nm) and laser diodes ($\Delta\lambda_0 \approx$ 2 nm) with Ge APDs as detectors. The losses in the fibres were ~ 1 dB/km. These systems are usually said to belong to second generation optical communication systems. In a typical operating system the repeater spacing was 30 km and the bit rate was ~ 45 Mbit/s. Thus, in comparison to first generation systems, the repeater spacing was increased by a factor of about 2.5 which was primarily due to the decrease in pulse dispersion as well as in the losses in optical fibres.

As shown above by operating at 1.3 μm wavelength, material dispersion has become extremely small and therefore the information-carrying capacity is limited by intermodal dispersion. This intermodal dispersion can be totally eliminated by using single mode fibres where only one guided mode is possible.

This will be discussed in the following section.

www.prepp.in

Prepp
Your Personal Exams Guide

46. Emission wavelength of InGaAsP/InP device is :

(A) 25 nm
(B) 2 nm
(C) 1.3 μm
(D) 0.8 μm

47. Importance of 1.3 μm range in optical communication arises to the fact that the :

(A) attenuation is lowest
(B) bandwidth is highest
(C) components are easily available
(D) impurities have no effect in transmission

48. The primary reason for shifting characteristic of optical fiber at 1550 nm to 1300 nm is :

(A) to increase mechanical strength of fiber for 1300 nm operation
(B) to obtain low attenuation at 1300 nm
(C) to make use high quality laser diodes
(D) to reduce the disportion problems at 1300 nm

49. Intramodal dispersion is *not* a limiting factor in the following spectral region for a silica fiber :

(A) 0.85 μm
(B) 0.13 μm
(C) 0.14 μm
(D) 0.15 μm

50. The size of functional elements in MEMS is of the order of :

(A) 1×10^{6} m
(B) 1×10^{-3} m
(C) 1×10^{-6} m
(D) 1×10^{-9} m

www.prepp.in

Prepp
Your Personal Exams Guide

51. Force exerted by magnetic field in Hall effect transducer is :

(A) Lorentz force
(B) Hall effect
(C) Magnetic force
(D) Electric force

52. The bridge balance equation can be written in :

(A) Impedance form
(B) Resistance form
(C) Conductance form
(D) Admittance form

53. Following is the most accurate temperature transducer :

(A) Thermistor
(B) Thermocouple
(C) Radiation thermometer
(D) Bimetal strips

54. Lissajous figure corresponding to phase difference of $3\pi/4$ is :

(A)
(B)
(C) 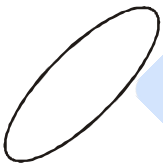
(D) 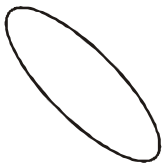

55. The best suited flow-meter to handle corrosive liquids is :

(A) Displacement flow-meter
(B) Piston type flow-meter
(C) Turbine flow-meter
(D) Magnetic flow-meter

56. Characteristic equation in a control system is a relation formed by :

(A) Equating to zero the denominator of transfer function
(B) Equating to zero the numerator of transfer function
(C) Equating numerator to denominator of transfer function
(D) Equation both numerator and denominator to zero of the transfer function

www.prepp.in

57. The frequency that would occur for two complex poles if the damping were equal to zero is called :

(A) Forced damping frequency
(B) Critical damping frequency
(C) Natural frequency
(D) Conditional frequency

58. For the following ladder network :

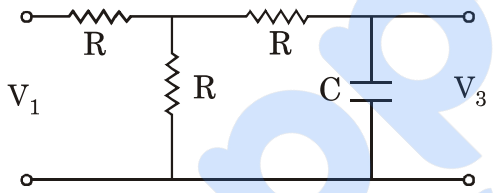

its block diagram is :

(A)
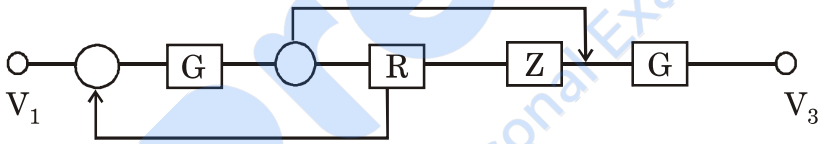

(B)
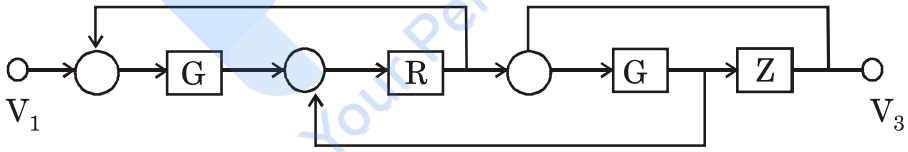

(C)
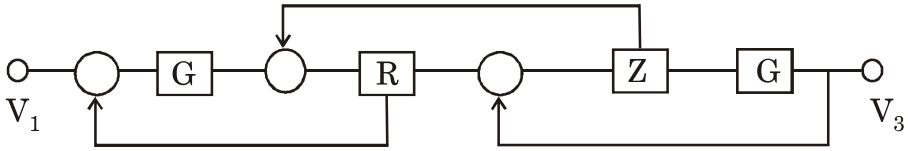

(D)
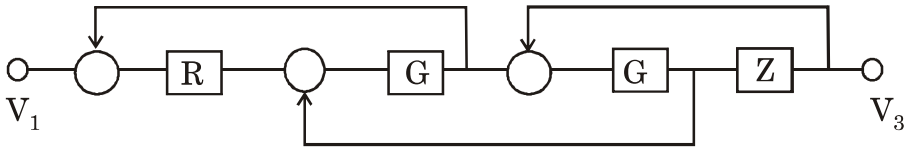

www.prepp.in

59. The transfer function of the following differentiating circuit is :

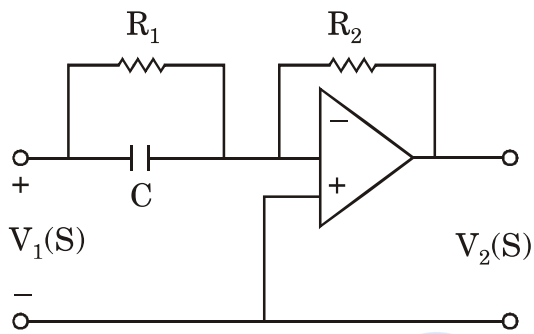

(A) $-\left[\frac{R_2(R_1C_s + 1)}{R_1}\right]$

(B) $-\left[\frac{R_1(R_2C_s + 1)}{R_2}\right]$

(C) $\left[\frac{R_1R_2(C_s + 1)}{R_1}\right]$

(D) $\left[\frac{R_2(R_1C_s - 1)}{R_1}\right]$

60. **Assertion (A) :**

Many of the linear control system transfer functions do not have poles or zeroes in the right half s-plane.

Reason (R) :

These are called minimum phase transfer functions.

(A) Both (A) and (R) are true and (R) is correct explanation of (A)

(B) Both (A) and (R) are true and (R) is not correct explanation of (A)

(C) (A) is true, (R) is false

(D) (A) is false, (R) is true

www.prepp.in

Prepp
Your Personal Exams Guide

61. Which of the following is *not* a semiconductor ?

(A) Galium Arsenide
(B) Indium
(C) Germanium
(D) Silicon

62. In the case of N-type semiconductor the energy required to detach fifth electron from the donor atom is :

(A) 0.01 eV
(B) 0.05 eV
(C) 0.25 eV
(D) 0.70 eV

63. P-side of a semiconductor diode is applied a potential of 0.5 V whereas the N-side is applied a potential of –1.0 V. The diode shall :

(A) Conduct partially
(B) Not conduct
(C) Conduct
(D) Breakdown

64. A semiconductor is irradiated with light such that carriers are uniformly generated throughout its volume. The semiconductor is N-type with $N_D = 10^{19}/cm^3$. If the excess electron concentration in the steady state is $\Delta_n = 10^{15}/cm^2$ and if $\tau_p = 10$ µs C minority carrier life time, then what is the generation rate due to irradiation ?

(A) 10^{20} e-h pairs/cm^3/s
(B) 10^{14} e-h pairs/cm^3/s
(C) 10^{10} e-h pairs/cm^3/s
(D) 10^{8} e-h pairs/cm^2/s

65. Compared to BJT, a JFET has :

(A) Lower input impedance
(B) Higher voltage gain
(C) Higher input impedance and high voltage gain
(D) Higher input impedance and low voltage gain

www.prepp.in

Prepp
Your Personal Exams Guide

66. In a MOSFET devices, the N-channel type is better than the P-channel type in the following respect :

(A) It has better noise immunity
(B) It is faster
(C) It is TTL compatible
(D) It has drive capability

67. Hydrofluoric acid is preferred in wet etching. Which of the following is/are *correct* for Hydrofluoric acid (HF) ?

(1) HF does not attack SiO_2
(2) HF attacks SiO_2
(3) HF affects silicon substrate underneath
(4) HF does not affect silicon substrate underneath

(A) 1 and 2
(B) 2 and 3
(C) 2 and 4
(D) 1 and 3

68. In the case of degenerate P-type material which of the following is/are *correct* ?

(1) Acceptor concentration is very high
(2) Donor concentration is very high
(3) The Fermi level lies in the valence band
(4) The Fermi level lies in the conduction band

(A) 1 only
(B) 2 only
(C) 2 and 4
(D) 1 and 3

www.prepp.in

Prepp
Your Personal Exams Guide

69. Which solution is used when the silicon water undergoes chemical-mechanical polishing ?

(A) a slurry of very fine SiO_2 particles in basic KOH solution

(B) a slurry of very fine SiO_2 particles in a basic NaOH solution

(C) a slurry of very fine SiO_2 solution only

(D) in a NaOH solution only

70. Match List I with List II :

List I	**List II**
(*a*) Si + O_2	(1) Wet oxidation
(*b*) Si + $2H_2O$	(2) Operates for only few seconds at high temperatures
(*c*) Ion implantation	(3) Dry oxidation
(*d*) Rapid thermal processing	(4) Projected range

Codes :

	(*a*)	(*b*)	(*c*)	(*d*)
(A)	(3)	(1)	(2)	(4)
(B)	(1)	(3)	(4)	(2)
(C)	(3)	(1)	(4)	(2)
(D)	(1)	(2)	(4)	(3)

www.prepp.in

71. The RC circuit shown in the following figure, is :

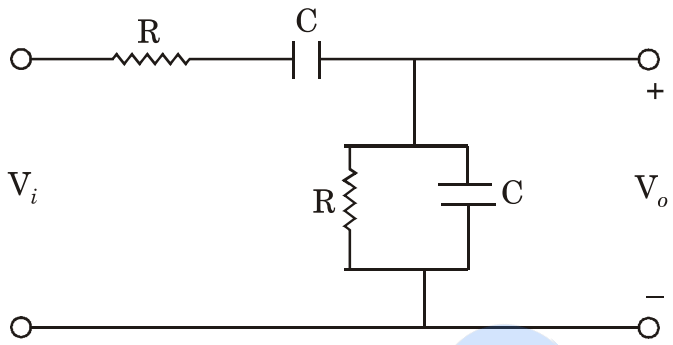

(A) a low pass filter

(B) a high pass filter

(C) a band pass filter

(D) a band reject filter

72. If the transfer function of the following network is

$$\frac{V_o(s)}{V_i(s)} = \frac{1}{2+SCR},$$

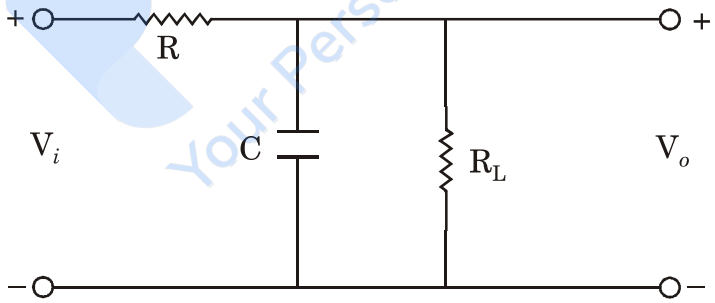

then the value the Load Resistor R_L is :

(A) R/4

(B) R/2

(C) R

(D) 2R

www.prepp.in

Prepp
Your Personal Exams Guide

73. Superposition theorem is essentially based on the concept of :

(A) Duality
(B) Linearity
(C) Reciprocity
(D) Non-linearity

74. A source of angular frequency 1 radian/second has a source impedance consisting of 1 Ω resistance in series with 1 H inductance. The load that will obtain the max power transfer is :

(A) 1 Ω resistance
(B) 1 Ω resistance in parallel with 1 H inductance
(C) 1 Ω resistance in series with 1 F capacitor
(D) 1 Ω resistance in parallel with 1 F capacitor

75. A DC voltage source is connected across a series RLC circuit. Under steady state conditions, the applied DC voltage drops entirely across the :

(A) C only
(B) L only
(C) R only
(D) R and L combinations

76. Consider a DC voltage source V_S connected to a series RC circuit. When the steady state reaches, the ratio of the energy stored in the capacitor to the total energy supplied by the voltage source is equal to :

(A) 0.322
(B) 0.632
(C) 0.500
(D) 1.000

www.prepp.in

Prepp
Your Personal Exams Guide

77. Convolution of :

$$x(n) = (1, 2, 1) \text{ and } h(n) = \{\underset{\uparrow}{1}, 2, -1\}$$

will be :

(A) {1, 4, 4, 1, –1}

(B) {1, 1, 4, 4, –1}

(C) {1, –1, 1, 4, 4}

(D) {4, 4, 1, 1}

78. z-transform of $x(n - n_0)$ is :

(A) $z^{-n_0} X(2)$

(B) $z^{+n_0} X(2)$

(C) $X(z - 20)$

(D) $z^{-n}.X(2)$

79. Image impedances of port 1 and port 2 of symmetrical two-port network is :

(A) Zero

(B) Infinite

(C) Equal

(D) Not equal

80. Laplace transform of parabolic function is :

(A) $2/s$

(B) $1/s^2$

(C) $1/s^3$

(D) $2/s^3$

81. Which of the following does *not* adopt any feedback ?

(A) Phase shift oscillator

(B) UJT relaxation oscillator

(C) Wein-Bridge oscillator

(D) Colpit's oscillator

www.prepp.in

82. Estimate V_{GS} in the following circuit :

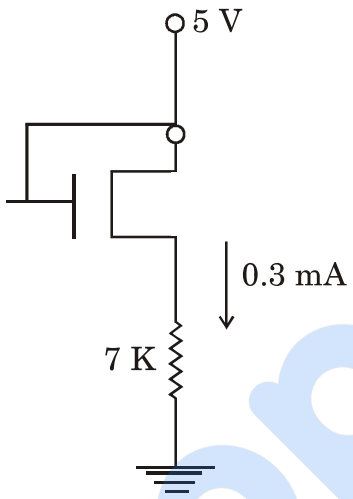

(A) 1.5 V
(B) 4.9 V
(C) 3.5 V
(D) 2.9 V

83. In LM 317 minimum value of voltage required between its input and output for proper functioning is :
(A) 3 V
(B) 1 V
(C) 5 V
(D) 10 V

84. Gain bandwidth product of an amplifier after inclusion of negative feedback :
(A) Decreases
(B) Increases
(C) Remains constant
(D) Becomes zero

85. Bridge rectifier is an alternative to :
(A) Full wave rectifier
(B) Half wave rectifier
(C) Voltage regulator
(D) π-section filter

86. Which of the following holds good for a phase locked loop ?
(A) Lock range < capture range
(B) Lock range > capture range
(C) VCO frequency > input frequency during lock
(D) VCO input voltage is zero during lock

www.prepp.in

Prepp
Your Personal Exams Guide

87. Which of the following can be used as a substitute for analog to digital conversion ?

(A) Frequency to voltage convertor
(B) Astable multivibrator
(C) Voltage to frequency convertor
(D) Voltage regulator

88. Starting from AC mains towards load, identify the *correct* sequence of building block of a regulated power supply :

(A) Rectifier, Regulator, Filter, Transformer
(B) Transformer, Filter, Regulator, Rectifier
(C) Transformer, Rectifier, Filter, Regulator
(D) Regulator, Transformer, Rectifier, Filter

89. Match the pairs between List I and List II :

List I	**List II**
(*a*) Negative feedback	(1) Comparator with controlled hysteresis
(*b*) Bipolar junction transistor	(2) Increased stability
(*c*) Operational amplifier	(3) Current controlled current amplifier
(*d*) Schmitt Trigger	(4) High open loop gain

Codes :

	(*a*)	(*b*)	(*c*)	(*d*)
(A)	(2)	(3)	(1)	(4)
(B)	(3)	(1)	(2)	(4)
(C)	(2)	(3)	(4)	(1)
(D)	(1)	(2)	(3)	(4)

www.prepp.in

Prepp
Your Personal Exams Guide

90. **Assertion (A) :**

Current gain of a Darlington pair is much higher compared to that of individual transistor.

Reason (R) :

Input impedance is high due to negative feedback.

(A) Both (A) and (R) are true and (R) is the correct explanation of (A)

(B) Both (A) and (R) are true but (R) is not the correct explanation of (A)

(C) (A) is true but (R) is false

(D) (A) is false and (R) is true

91. A demultiplexer is called a data distributor because :

(A) The input is distributed to one of the outputs

(B) One of the inputs is selected for the output

(C) The output is distributed to one of the inputs

(D) The output is buffered

92. A 4-bit synchronous counter uses flip-flops with propagation delay of 15 ns. The maximum possible time required for change of state will be ..... and that in case of asynchronous counter will be :

(A) 45 ns and 60 ns

(B) 60 ns and 15 ns

(C) 15 ns and 60 ns

(D) 30 ns and 15 ns

93. The state diagram for a JKFF consists of :

(A) One state

(B) Two states

(C) Three states

(D) Four states

www.prepp.in

Prepp
Your Personal Exams Guide

94. The following HDL statement will implement :

assign Y = (A & & S) || (B & & S).

(A) 4-bit Encoder
(B) 4-bit Decoder
(C) 2 : 1 Multiplexer
(D) 1 : 2 DEMUX

95. The minimum number of bits of ADC required to monitor the temperature in the range 0 – 100°C with resolution of 1°C and the corresponding output at 25°C will be :

(A) 8-bits and 0100 0000
(B) 6-bits and 110 000
(C) 12-bits and 0000 1010 1111
(D) 10-bits and 10001 01000

96. An amount of memory required to store a 256 gray shade monochrome image with 512 × 512 resolution will be :

(A) 256 K bytes
(B) 512 K bytes
(C) 1 M bytes
(D) 64 K bytes

97. In a data transmission system, the set of possible symbols is :

{lower-case alphabet} ∪ {upper-case alphabet} ∪ {space, comma, full stop, end of transmission}

Where ∪ denotes the union of two sets. How many bits of information will be required for the symbols ? And how much time will be required to transmit "Department of Electronic Sciences" at 9600 baud ?

(A) 7-bits and 33 ms
(B) 6-bits and 40 ms
(C) 7-bits and 40 ms
(D) 8-bits and 30 ms

www.prepp.in

Prepp
Your Personal Exams Guide

98. In terms of increasing speeds the ADCs can be listed as :

(A) Successive approximation, dual slope, flash

(B) Dual slope, successive approximation, flash

(C) Dual slope, flash, successive approximation

(D) Flash, dual slope, successive approximation

99. Match the List I with List II and select the *correct* answer using the codes given below it :

List I	**List II**
(*a*) SRAM	(1) Floating gate MOSFET
(*b*) DRAM	(2) Flip-Flop
(*c*) Flash Memory	(3) Magnetic
(*d*) Hard Disk	(4) MOSFET

Codes :

	(*a*)	(*b*)	(*c*)	(*d*)
(A)	(1)	(2)	(3)	(4)
(B)	(2)	(4)	(3)	(1)
(C)	(2)	(4)	(1)	(3)
(D)	(4)	(1)	(2)	(3)

100. **Assertion (A) :**

Multiplexer can be used as a configurable logic block.

Reason (R) :

Multiplexer acts a Boolean processor.

(A) Both (A) and (R) are true and (R) is the correct explanation of (A)

(B) Both (A) and (R) are true but (R) is not the correct explanation of (A)

(C) (A) is true but (R) is false

(D) (A) is false and (R) is true

www.prepp.in

Prepp
Your Personal Exams Guide

ROUGH WORK

Prepp
Your Personal Exam Guide